MERCURY DISPLACEMENT INDUSTRIES, INC.
Post Office Box 710 - U.S. 12 East - Edwardsburg, Michigan 49112-0710
Phone (269) 663-8574 - Fax (269) 663-2924
(800) 634-4077

2100NO-220AH

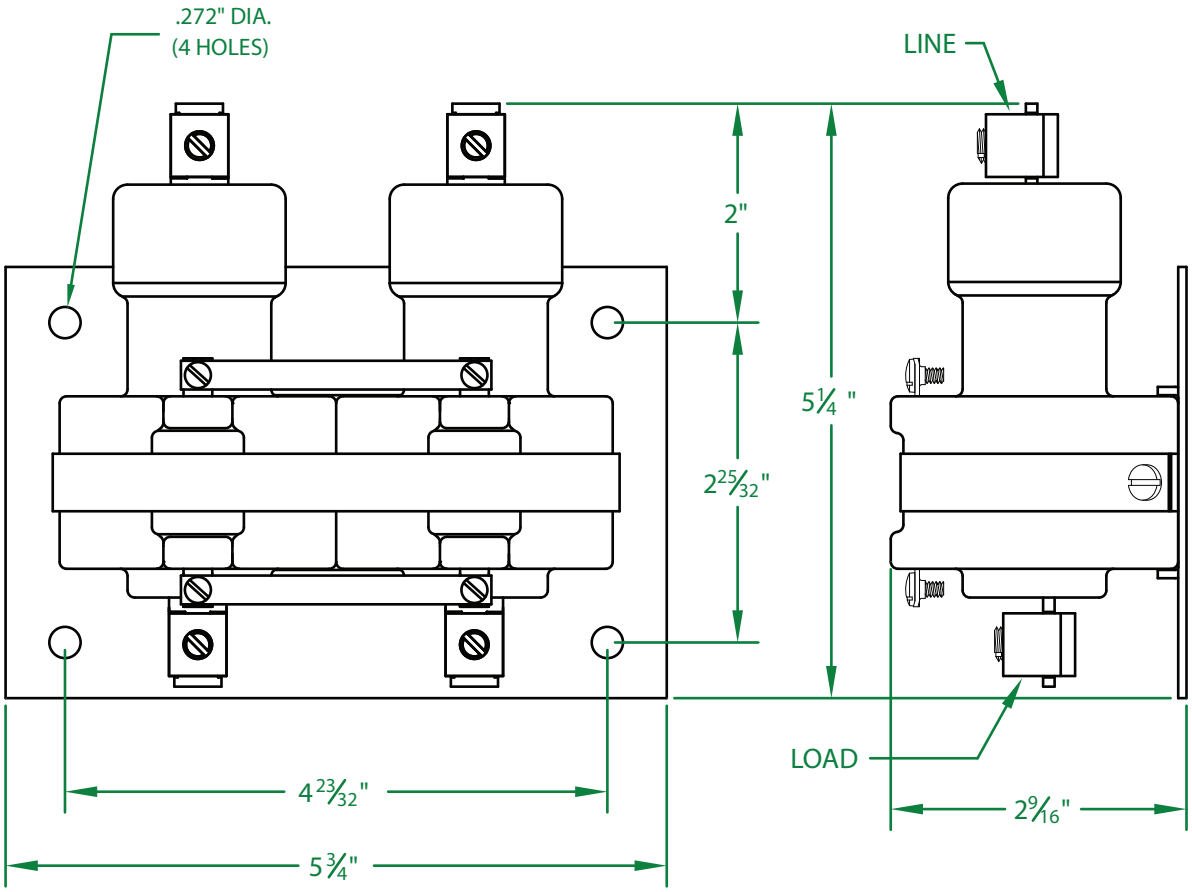

* CONTACT RESISTANCE .001 ohms

* DIELECTRIC WITHSTAND 2,500 VAC RMS

* OPERATE TIME 50 MILLISECONDS

* RELEASE TIME 80 MILLISECONDS

* RATINGS:
  CONTACTS: 80 AMP @ 480 VAC
  100 AMP @ 240 VAC
  RESISTIVE OR GENERAL PURPOSE
  COIL: 208/240V 50/60 Hz
  RESISTANCE: 700 Ω
  CURRENT: 146 mA
  VA: 32.2 WATTAGE: 15.0

* TEMPERATURE RANGE -35° TO +85° C

* COIL TERMINALS #6 BINDING HEAD SCREWS
  TORQUE TO 7 IN-LB

* LOAD TERMINALS 2-8 AWG COMPRESSION TYPE
  TORQUE TO 45 IN-LB

* TWO POLE / SINGLE THROW

* MAGNETICALLY ACTIVATED

* MERCURY CONTACTOR

* LIFE CYCLE ENDURANCE TESTS: U.L. 508 @ 100,00 & CSA 22.2 @ 250,000 CYCLES

Contactors - Relays - Switches