MERCURY DISPLACEMENT INDUSTRIES, INC.
Post Office Box 710 - U.S. 12 East - Edwardsburg, Michigan 49112-0710
Phone (269) 663-8574 - Fax (269) 663-2924
(800) 634-4077

JNR2DW4000

MECHANICAL FLOAT

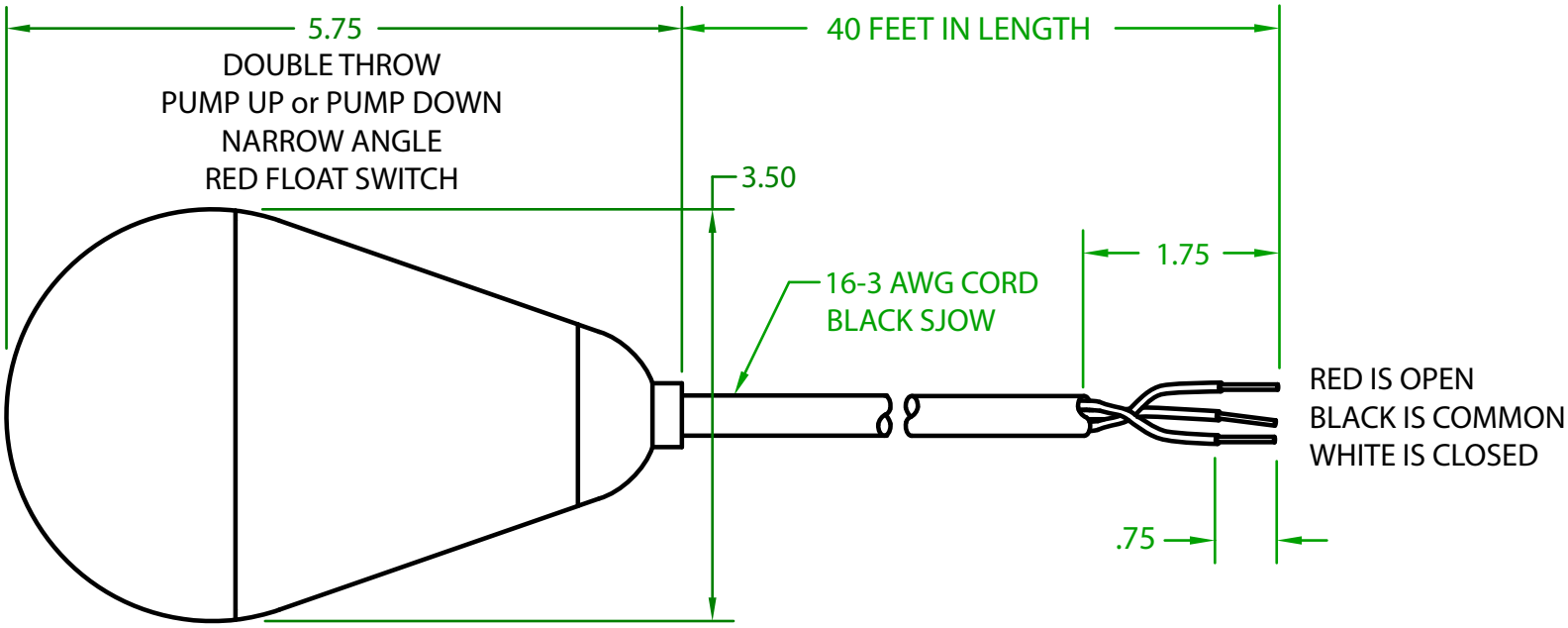

OPERATING ANGLE: SWITCHES @ 25° ABOVE AND 10° BELOW HORIZONTAL

ELECTRICAL RATINGS: 1/4 H.P. @ 120/240 VAC
10 AMPS @ 120/240 VAC 34.8 LRA

FLOAT MATERIAL: A.B.S.

J.J.S. April 23, 2020
Rev. 04-04-24

E-93774

Contactors - Relays - Switches

http://www.mdius.com