MERCURY DISPLACEMENT INDUSTRIES, INC.
Post Office Box 710 - U.S. 12 East - Edwardsburg, Michigan 49112-0710
Phone (269) 663-8574 - Fax (269) 663-2924
(800) 634-4077

JHF2OU30F2

MECHANICAL FLOAT

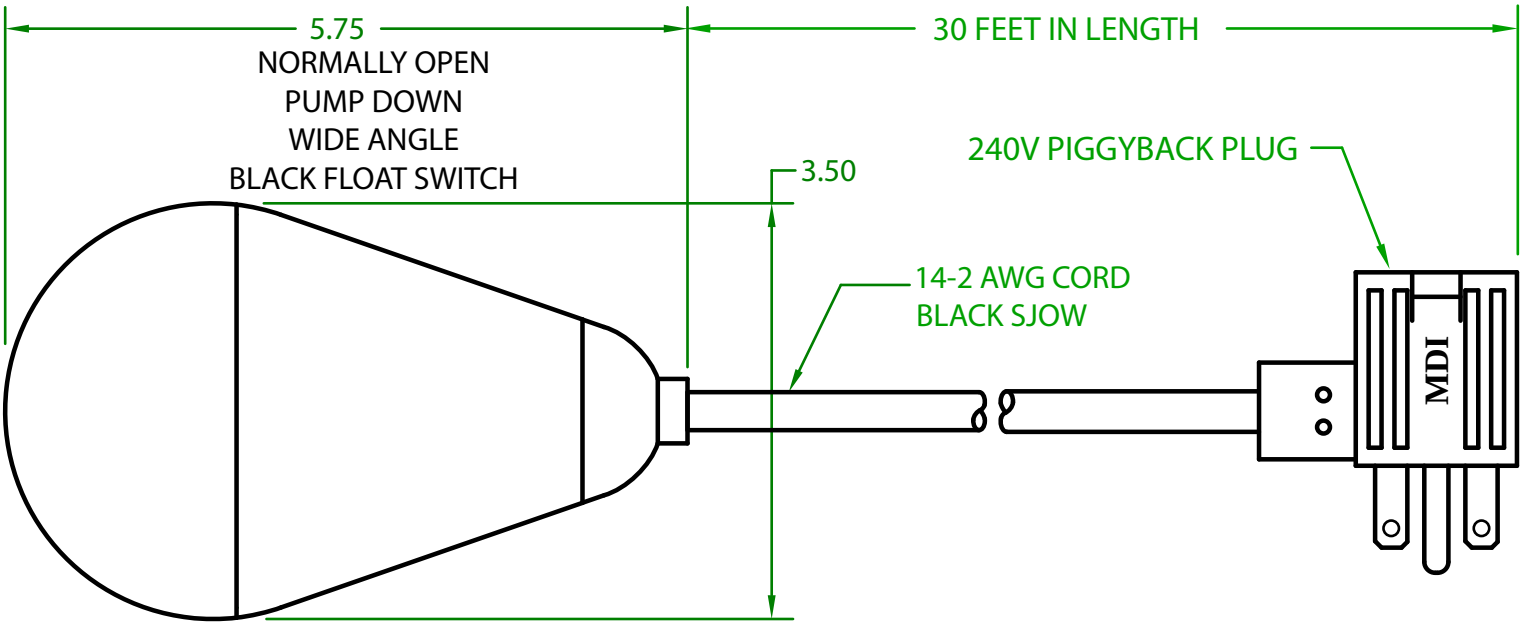

OPERATING ANGLE 90°: CONTACTS CLOSE @ 45° ABOVE HORIZONTAL
CONTACTS OPEN @ 45° BELOW HORIZONTAL

ELECTRICAL RATINGS: 1 H.P. @ 120 VAC
2 H.P. @ 240 VAC
15 AMPS @ 120/240 VAC 96 LRA

FLOAT MATERIAL: A.B.S.

LISTED UL 93774

J.J.S. April 15, 2020

Contactors - Relays - Switches

http://www.mdius.com